REVISIONS			
REV	DESCRIPTION	DATE	APPROVED
A1	12.55 was 9.37	05/25/10	Walt Sondheim

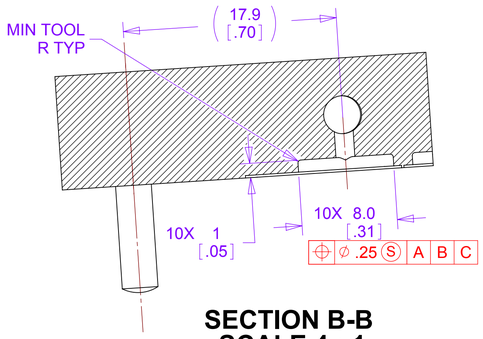

SECTION B-B
SCALE 4 : 1

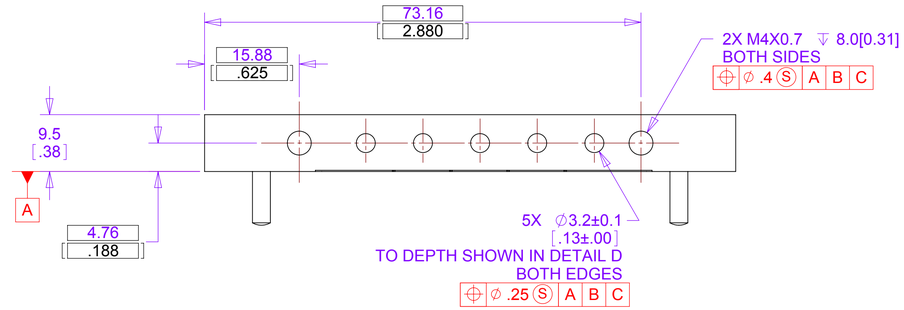

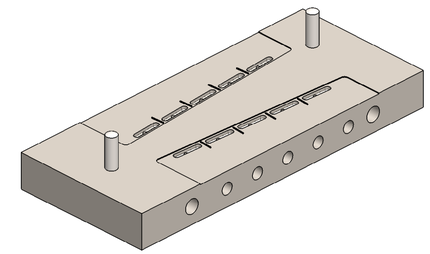

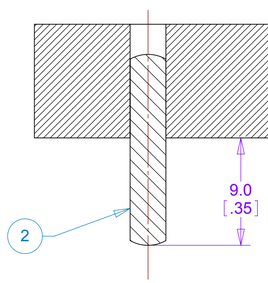

SECTION A-A
SCALE 4 : 1

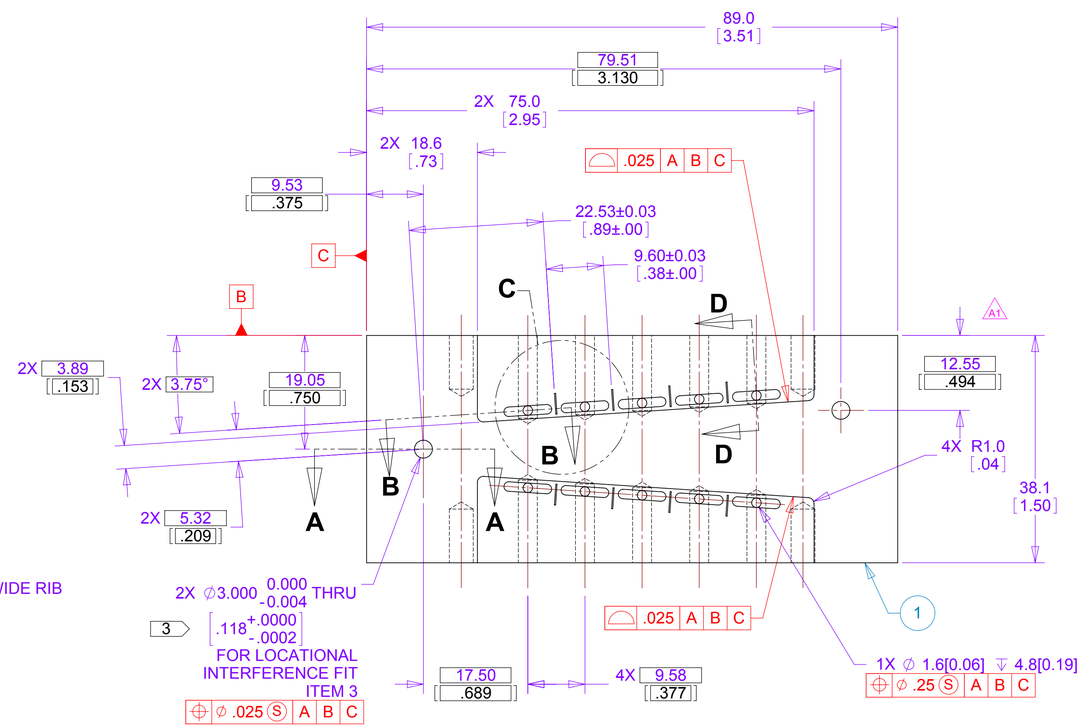

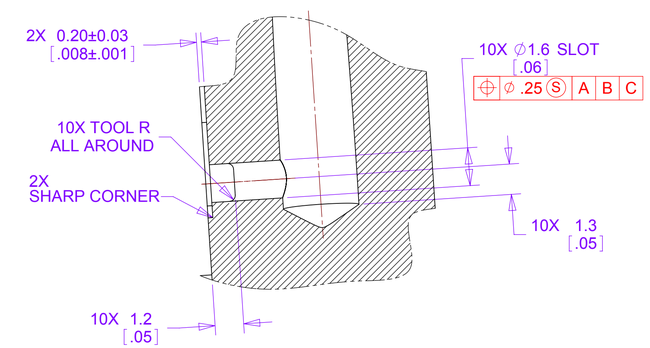

SECTION D-D
SCALE 8 : 1

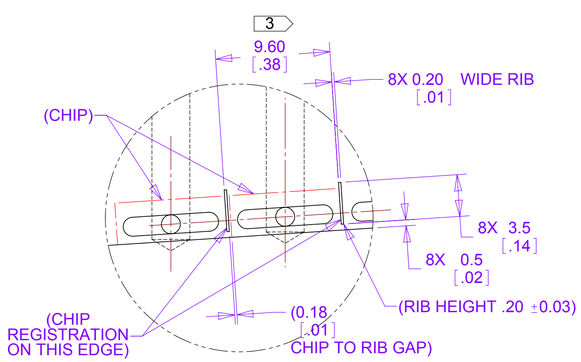

DETAIL C
SCALE 4 : 1

NOTES: UNLESS OTHERWISE SPECIFIED

1. ALL DIMENSIONS IN MILLIMETERS [DUAL DIMENSIONS IN INCHES]
2. DIMENSIONS AND TOLERANCING PER ASME Y14.5M-1994

3 INSPECT AND RECORD LOCATION.

PARTS LIST				
ITEM NO.	QTY.	PART NUMBER	DESCRIPTION	Material
1	1		Station 1 FVTX Chip Positioning Jig Plate	18-8 or 316 SST
2	2	Nordex EPS-M4-8 or Equiv.	Dowel Pin, 3.0mm X 16mm lg	18-8 SST

HYTEC RELEASED DOCUMENT

UNLESS OTHERWISE SPECIFIED:
DIMENSIONS ARE IN MILLIMETERS
-TOLERANCES-

DECIMALS
X = +/- .5
.X = +/- .1
.XX = +/- .01
.XXX = +/- .001

ANGULAR
.X = +/- 30'
.XX = +/- 15'

SURFACE FINISH = 250

FINISH

THIRD ANGLE PROJECTION

PART NO. 111-PHX-01-5305-1

CAD GENERATED DRAWING,
DO NOT MANUALLY UPDATE
DO NOT SCALE DRAWING

	SIGNATURE	DATE
Designer	Roger L. Smith	2/17/2010
Drawn	Roger L. Smith	2/17/2010
Checked	RJ Ponchione	4/12/2010
Engineer	RJ Ponchione	2/17/2010
Approved	RJ Ponchione	4/12/2010

HYTEC, INC

TITLE
PHENIX CENTRAL UPGRADE
FVTX STATION 1 DETECTOR
ASSEMBLY JIG
CHIP POSITIONING JIG

DWG. NO. 111-PHX-01-5305 SIZE D SHEET NO. 1 of 1

SCALE 2:1 REVISION A

THIS DOCUMENT CONTAINS INFORMATION THAT IS THE PROPRIETARY PROPERTY OF HYTEC, INC.
REPRODUCTION, DISCLOSURE, OR RELEASE TO OTHERS, MANUALLY OR ELECTRONICALLY,
IS STRICTLY PROHIBITED WITHOUT THE PRIOR WRITTEN CONSENT OF HYTEC, INC.